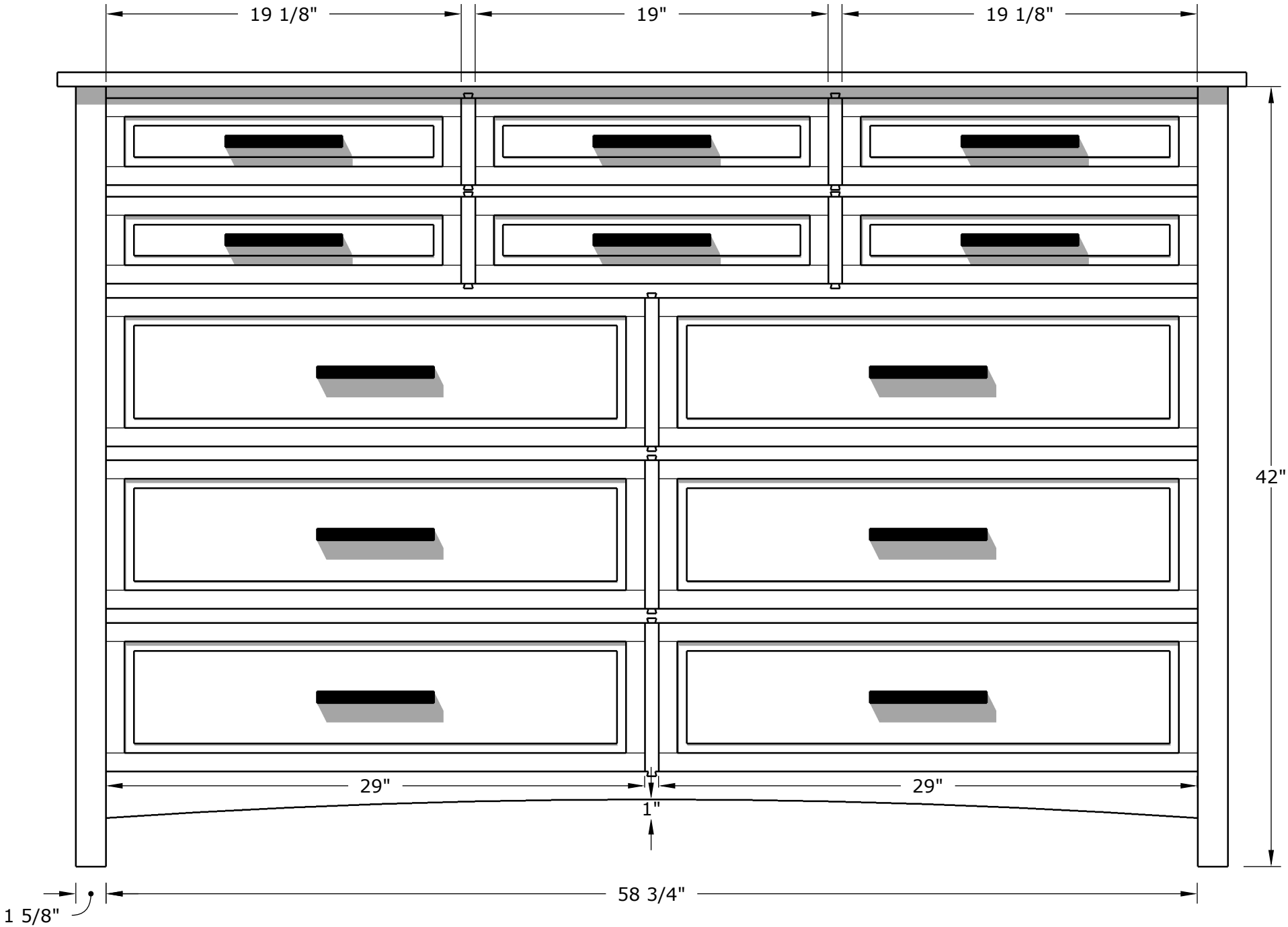
19 1/8"
19"
19 1/8"
42"
29"
29"
1"
58 3/4"
1 5/8"

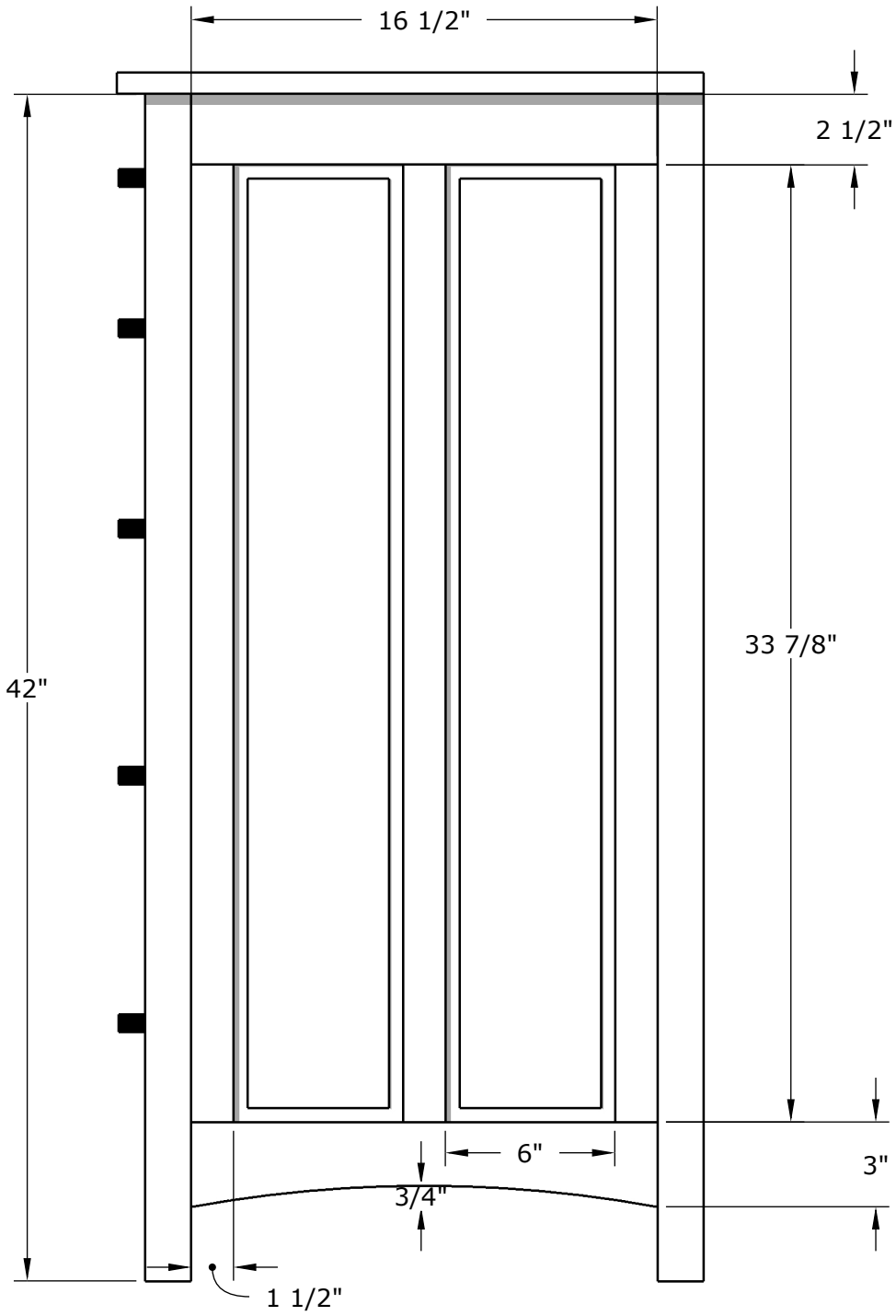
16 1/2"
2 1/2"
42"
33 7/8"
6"
3"
3/4"
1 1/2"

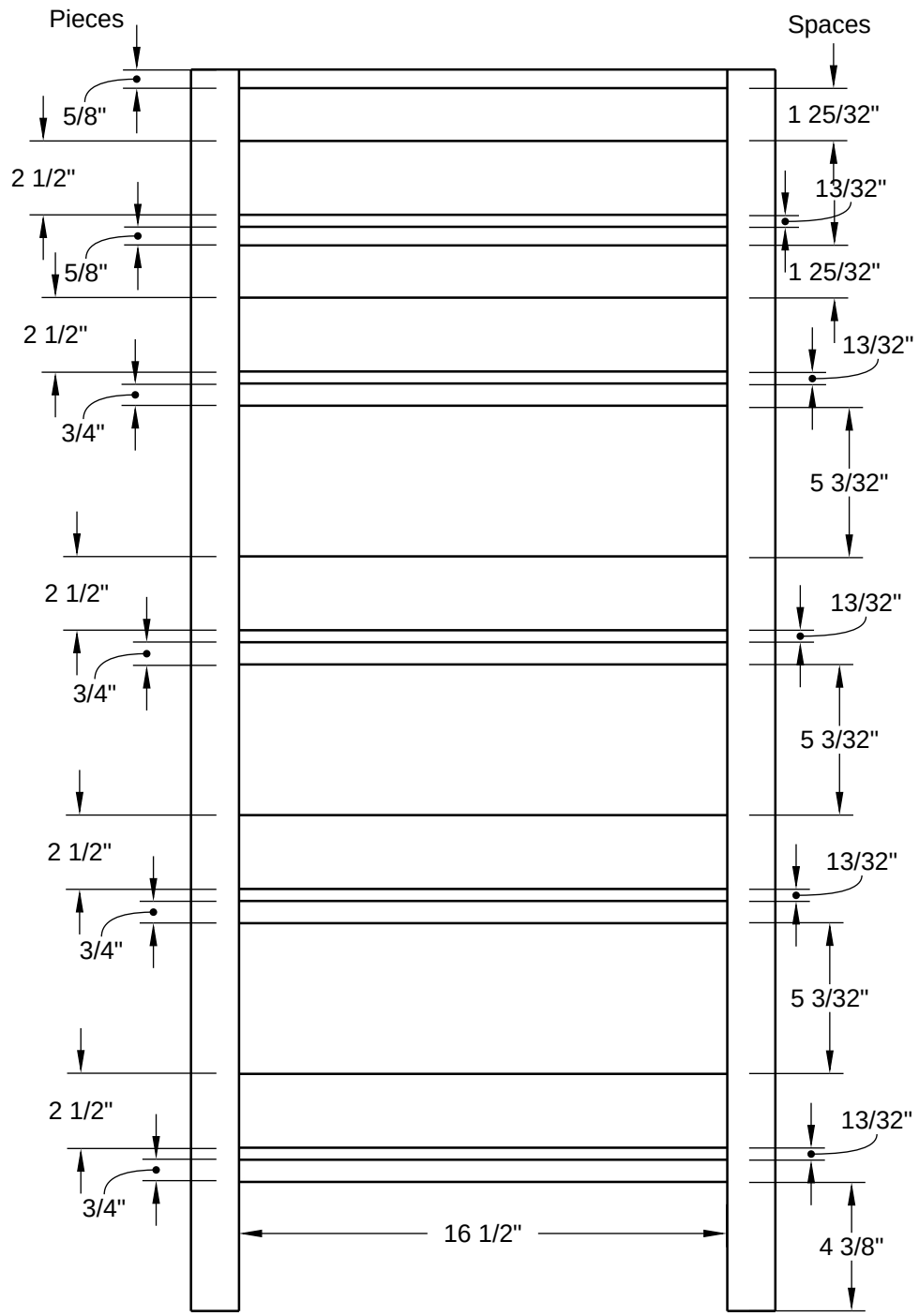
Pieces
Spaces
5/8"
1 25/32"
2 1/2"
13/32"
5/8"
1 25/32"
2 1/2"
13/32"
3/4"
5 3/32"
2 1/2"
13/32"
3/4"
5 3/32"
2 1/2"
13/32"
3/4"
5 3/32"
2 1/2"
13/32"
3/4"
16 1/2"
4 3/8"

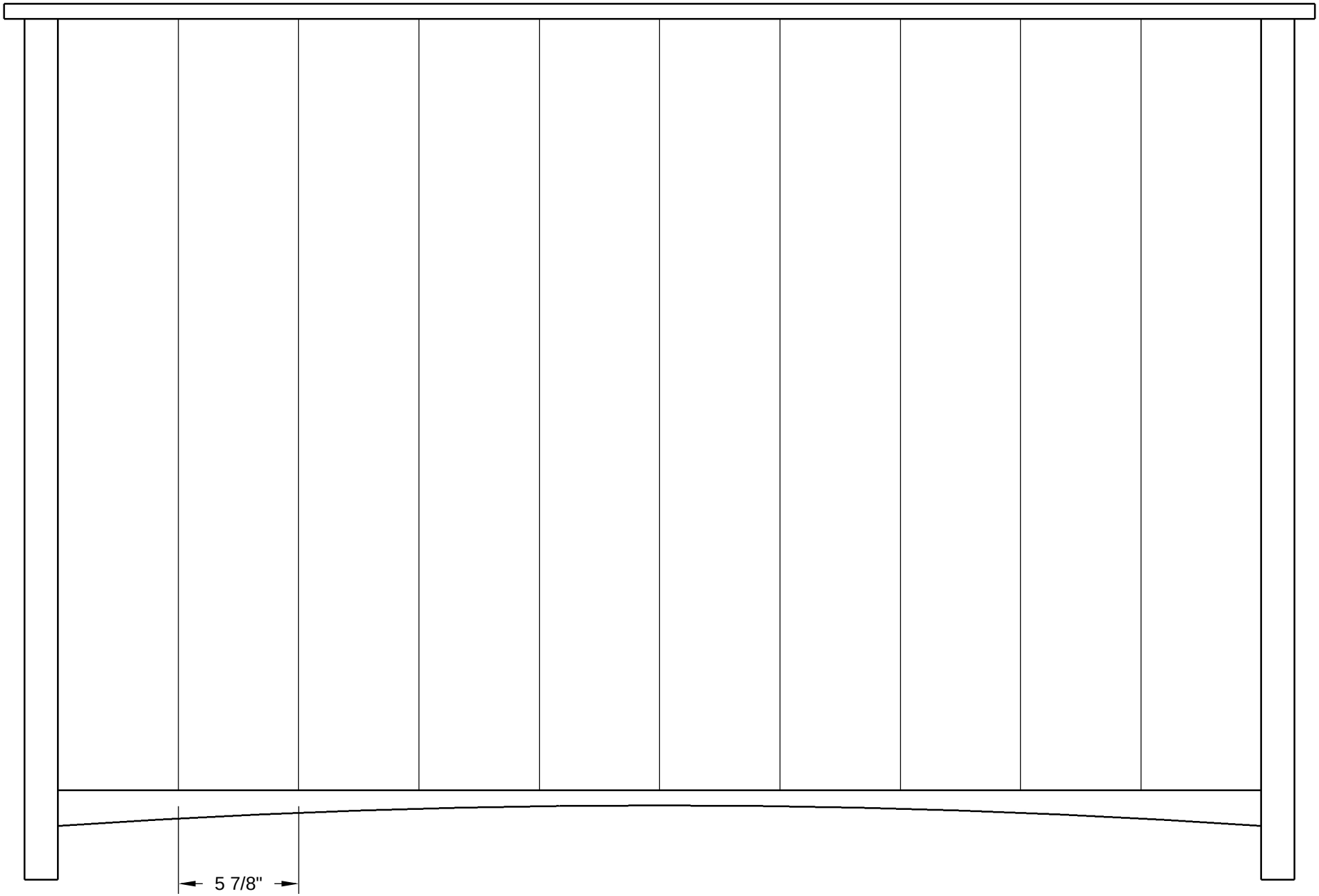
5 7/8"

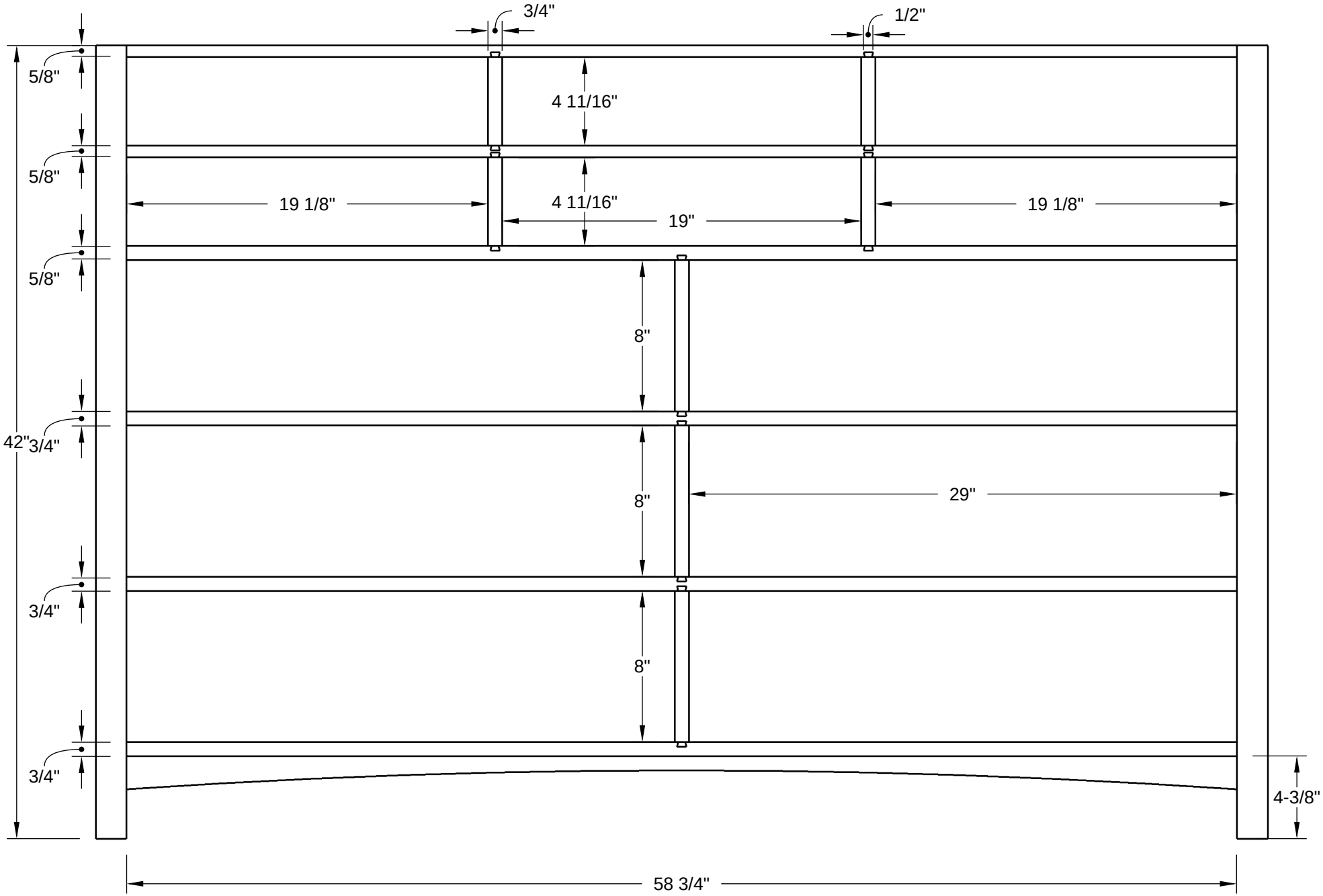
3/4"
1/2"
5/8"
4 11/16"
5/8"
19 1/8"
4 11/16"
19"
19 1/8"
5/8"
8"
42"
3/4"
8"
29"
3/4"
8"
3/4"
4-3/8"
58 3/4"

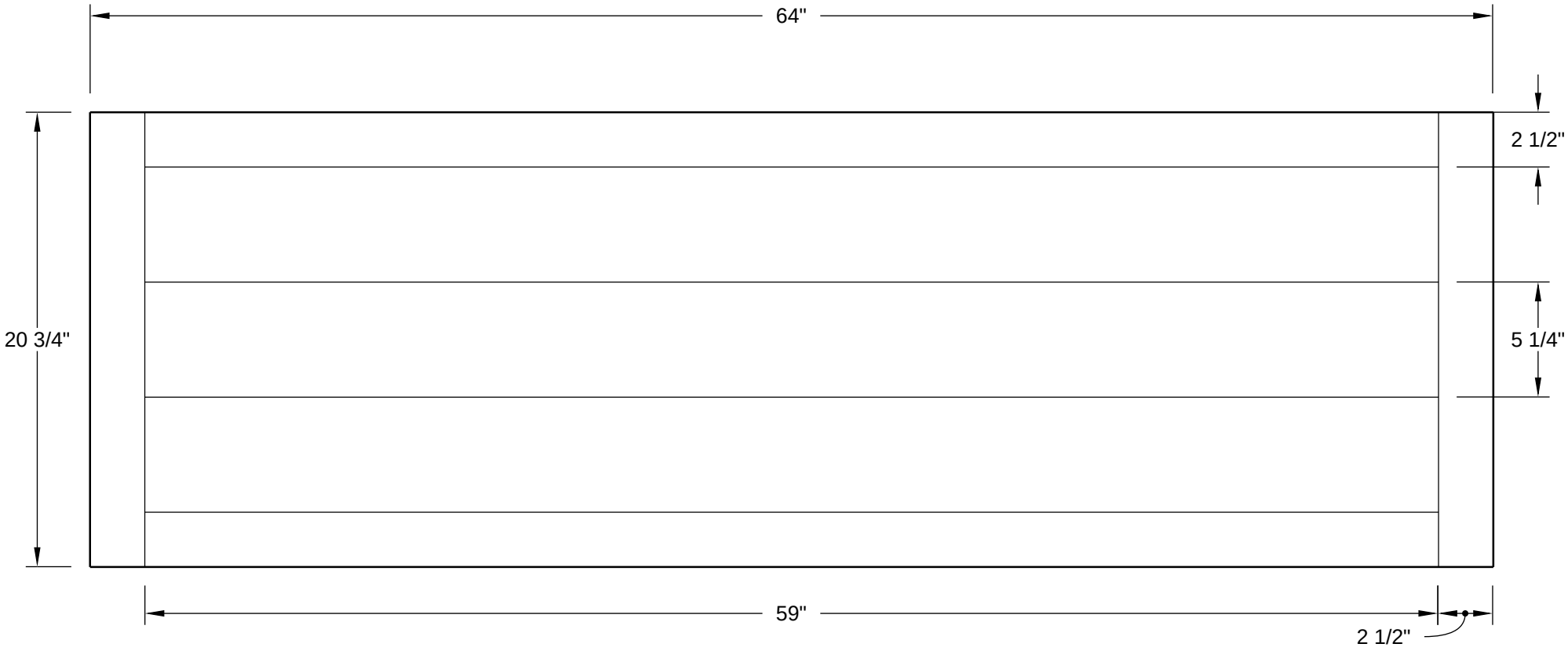
64"
2 1/2"
20 3/4"
5 1/4"
59"
2 1/2"

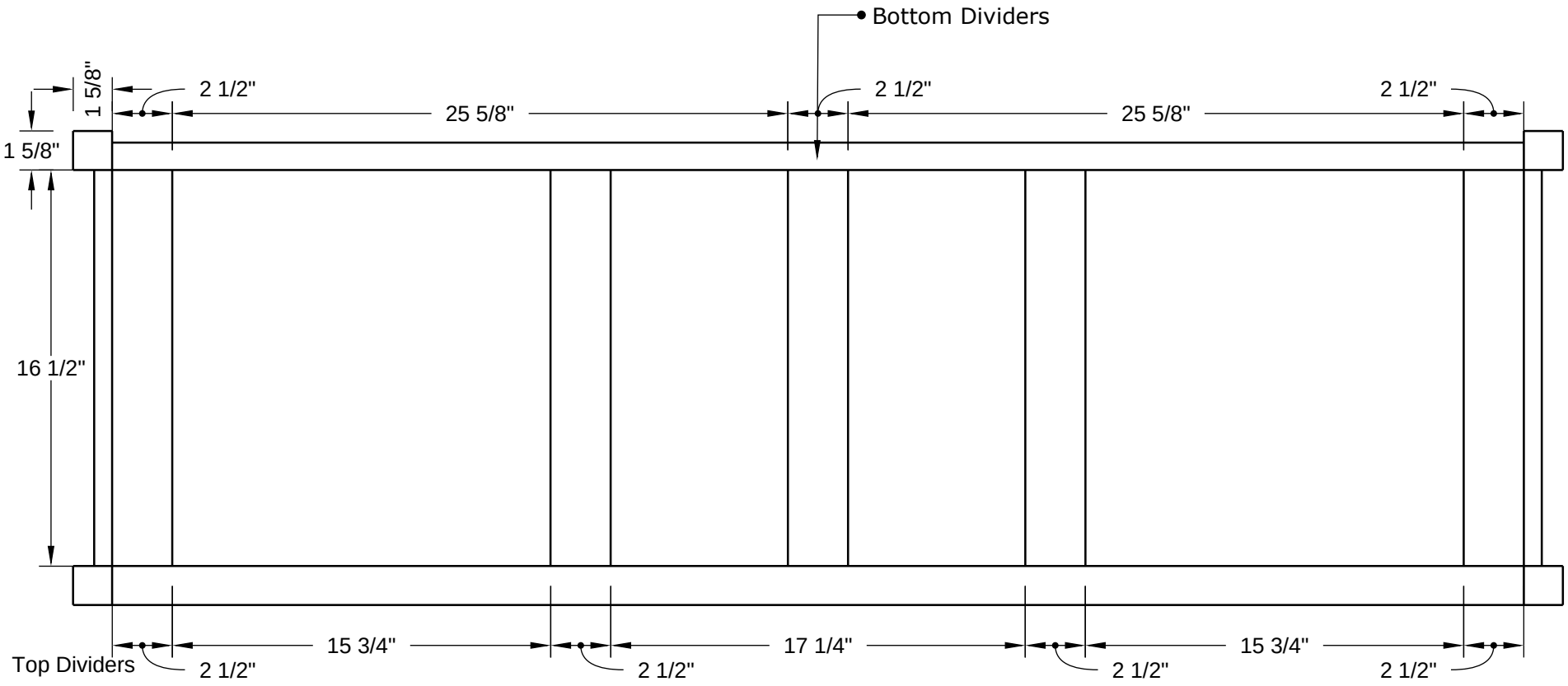
Bottom Dividers
1 5/8"
2 1/2"
25 5/8"
2 1/2"
25 5/8"
2 1/2"
1 5/8"
16 1/2"
Top Dividers
2 1/2"
15 3/4"
2 1/2"
17 1/4"
2 1/2"
15 3/4"
2 1/2"

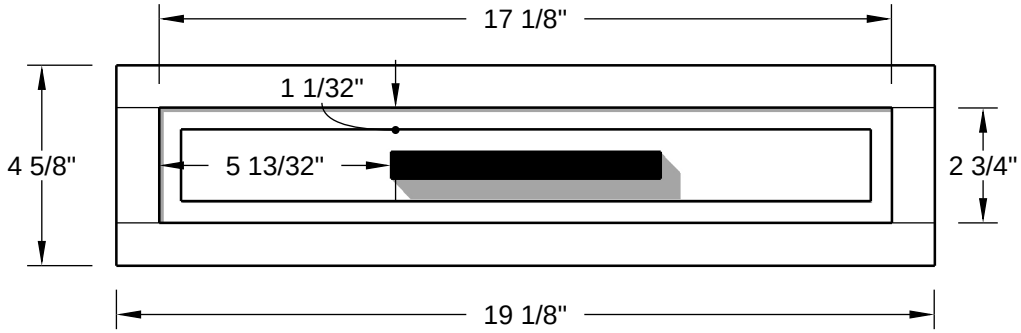
17 1/8"
1 1/32"
4 5/8"
5 13/32"
2 3/4"
19 1/8"

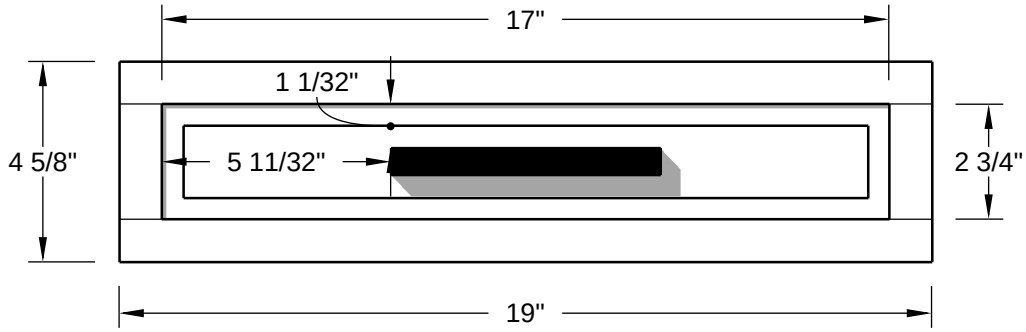
17"
1 1/32"
4 5/8"
5 11/32"
2 3/4"
19"

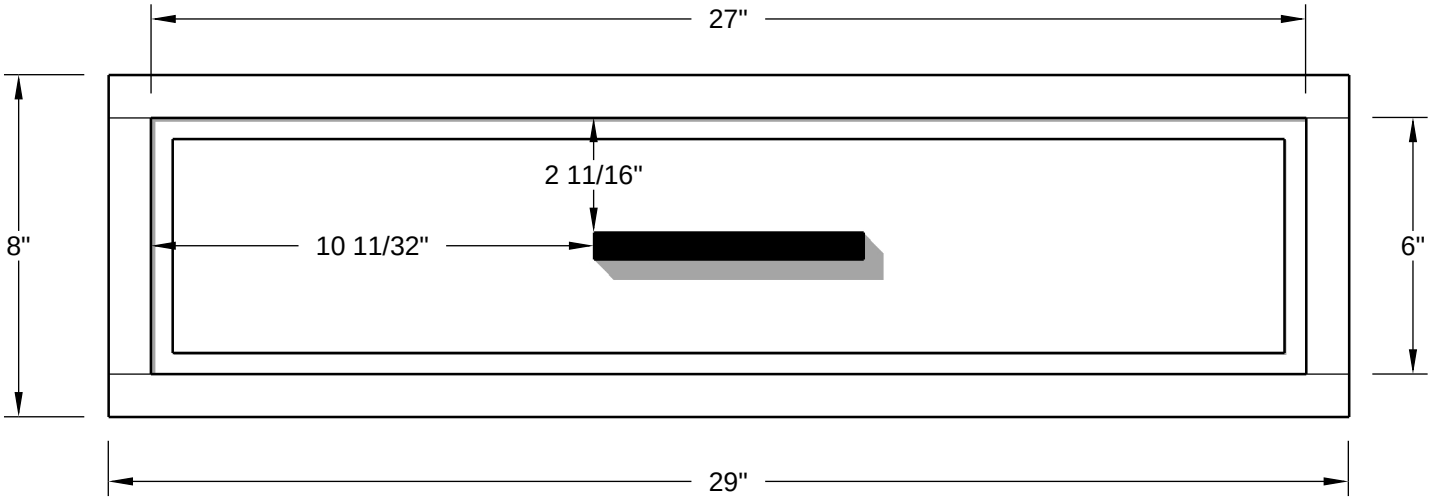
27"
2 11/16"
8"
10 11/32"
6"
29"